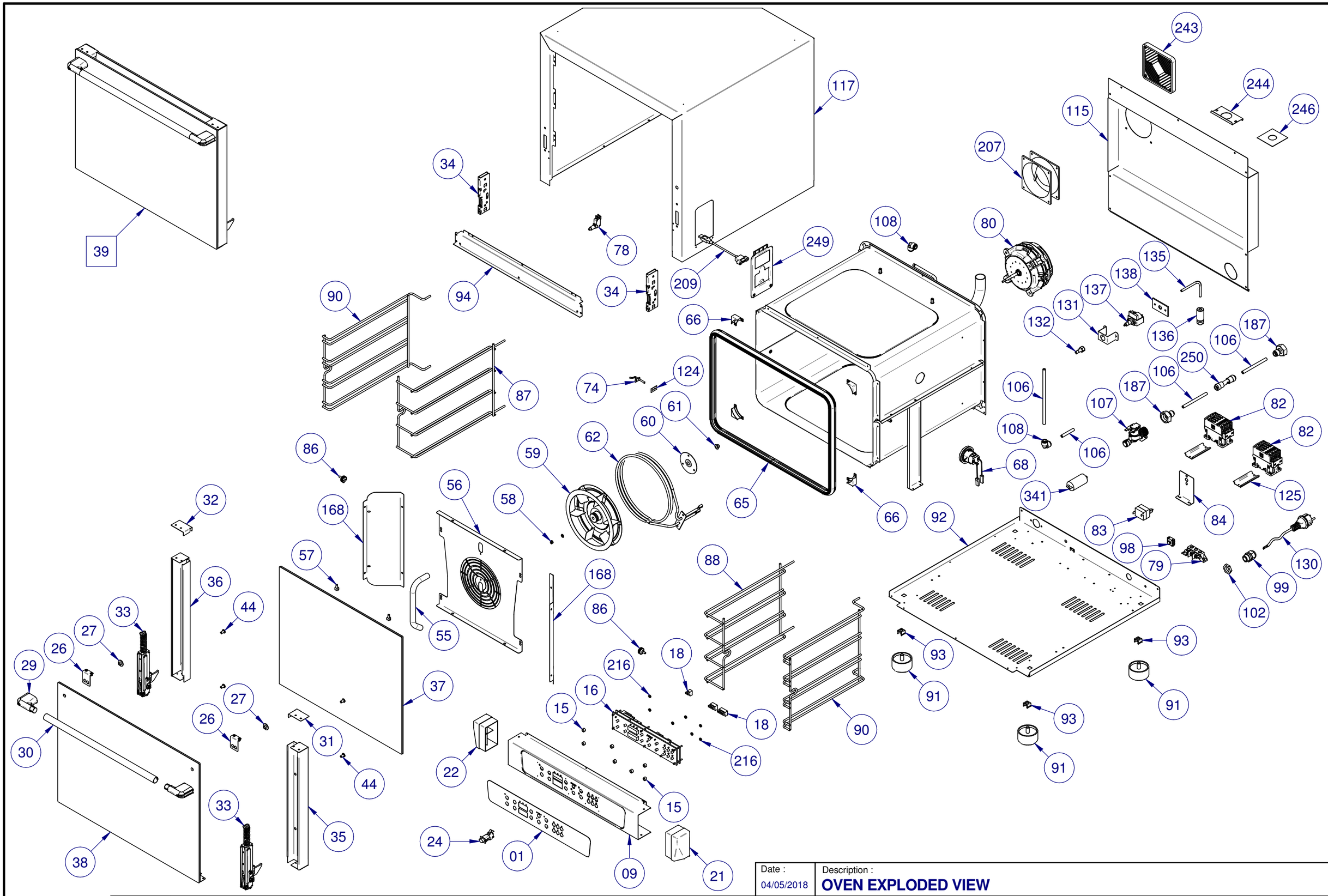

Scale : 1:10	mm	A3	Reserved property :	Drawing by: PREVEDELLO M.	Date : 04/05/2018
Model : B043D, DV, DV6.2 CB	Description : **OVEN EXPLODED VIEW**				
Name: **AD44D, AD44D with PUMP**					**APACH**