Dough mixer

# Explosive view

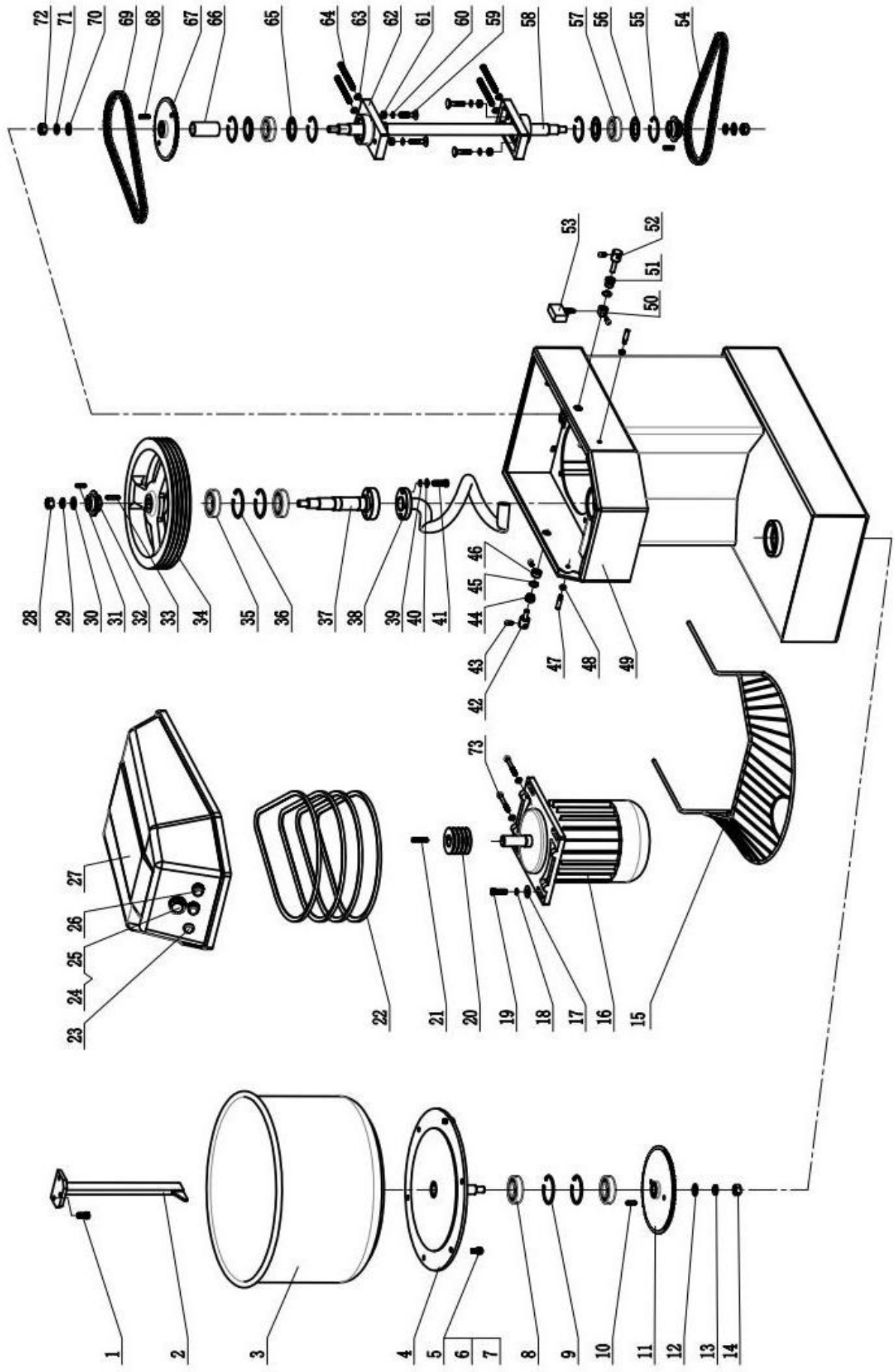
72 71 70 69 68 67 66 65 64 63 62 61 60 59 58 57 56 55 54
53 52 51 50
28 29 30 31 32 33 34 35 36 37 38 39 40 41 44 45 46 43 42 47 48 49
27 26 25 24 23 22 21 20 19 18 17 16 15 73
1 2 3 4 5 6 7 8 9 10 11 12 13 14

List

| Number | Name | Quantity | Remark |
|---|---|---|---|
| 1 | Hex bolts | 3 | |
| 2 | Anchor bar | 1 | |
| 3 | bowl | 1 | |
| 4 | turntable | 1 | |
| 5 | Screw | 6 | |
| 6 | spring washer | 6 | |
| 7 | Nut | 6 | |
| 8 | Bearing | 2 | |
| 9 | hole with ring | 2 | |
| 10 | flat key | 1 | |
| 11 | Sprocket III | 1 | |
| 12 | flat washer | 1 | |
| 13 | spring washer | 1 | |
| 14 | Nut | 1 | |
| 15 | Net cover | 1 | |
| 16 | Motor | 1 | |
| 17 | big washer | 4 | |
| 18 | spring washer | 4 | |
| 19 | Hex bolts | 4 | |
| 20 | small belt pulley | 1 | |
| 21 | flat key | 1 | |
| 22 | Triangular belt | 4 | |
| 23 | Indicator light | 1 | |
| 24 | Timer knob | 1 | |
| 25 | timer | 1 | |
| 26 | Button switch | 2 | |
| 27 | upper cover | 1 | |
| 28 | Nut | 1 | |
| 29 | spring washer | 1 | |
| 30 | flat washer | 1 | |
| 31 | flat key | 1 | |
| 32 | Sprocket II | 2 | |

| Number | Name | Quantity | Remark |
|---|---|---|---|
| 33 | flat key | 1 | |
| 34 | Large belt pulley | 1 | |
| 35 | deep groove ball bearing | 2 | |
| 36 | hole with ring | 2 | |
| 37 | belt wheel shaft | 1 | |
| 38 | Rotary hook | 1 | |
| 39 | spring washer | 4 | |
| 40 | flat washer | 4 | |
| 41 | Hex bolts | 4 | |
| 42 | shaft | 1 | |
| 43 | soket head cap screw | 4 | |
| 44 | sleeve | 1 | |
| 45 | shaft ring | 2 | |
| 46 | check sleeve | 1 | |
| 47 | Pin shaft | 2 | |
| 48 | Nut | 2 | |
| 49 | housing | 1 | |
| 50 | clutch block | 1 | |
| 51 | sleeve II | 1 | |
| 52 | Shaft II | 1 | |
| 53 | position switch | 1 | |
| 54 | Long Chain | 1 | |
| 55 | hole with ring | 4 | |
| 56 | bearing seat bottom gasket | 2 | |
| 57 | Self-aligning ball bearing | 2 | |
| 58 | bridge shaft | 1 | |
| 59 | Mushroom head square neck bolt | 4 | |

| Number | Name | Quantity | Remark |
|---|---|---|---|
| 60 | spring washer | 4 | |
| 61 | Nut | 4 | |
| 62 | bearing block | 2 | |
| 63 | flat washer | 6 | |
| 64 | soket head cap screw | 4 | |
| 65 | bearing seat gasket | 2 | |
| 66 | shaft sleeve | 1 | |
| 67 | spocket wheel I | 1 | |
| 68 | flat key | 2 | |
| 69 | short chain | 1 | |
| 70 | flat washer | 2 | |
| 71 | spring washer | 2 | |
| 72 | Nut | 2 | |
| 73 | soket head cap screw | 2 | |