ITEM #

MODEL #

NAME #

SIS #

AIA #

Peelers
T15E - 15 kg - Abrasive plate + Filter table



CC0HPG (DT15E324FT) 15 kg vegetable peeler. Abrasive plate. Pre-assembled filter table with sliding shelf.

Short Form Specification

Item No.

Constructed in stainless steel with a transparent lid in special high resistant plastic. The removable rotating plate is covered with a removable rotating plate covered in very resistant abrasive material (silicon carbide). Flat and waterproof (IP55) control panel with programmable timer and low voltage level. An interlocking safety magnetic devices will stop the machine from operating when the lid or unloading door is opened. Removable water jet device is fitted as standard to facilitate cleaning.
Supplied with abrasive plate and pre-assembled filter table with sliding shelf.

APPROVAL:

Main Features

- Suitable for 80-300 meals per service.
- Transparent lid in damage-resistant plastic material allows visibility during peeling cycle.
- Removable rotating plate covered in very resistant abrasive material (silicon carbide).
- Peels are reduced to small pieces to facilitate drainage process.
- Pulse function to control the unloading operation.
- Removable water inlet, clipped to the cover, designed to serve as a spray to clean the machine.
- Timer with countdown display.
- Magnetic detectors will stop the machine from operating when the lid and/or door are opened.
- Supplied with:
  -abrasive plate
  -pre-assembled filter table

Construction

- Complete stainless steel construction.
- IP55 waterproof touch button control panel.
- Transparent BPA free cover incorporates a magnetic safety system which stops the machine if lid is not properly closed.

Optional Accessories

- Brushing plate for T10 or T15 (not for models with abrasive cylinder) PNC 653058 ❑
- Abrasive plate for small onions, shallots and garlic T10 or T15, 388 mm diam.(not for models with abrasive cylinder) PNC 653184 ❑
- Abrasive plate for T10 or T15 PNC 653203 ❑
- Knife plate for 10 and 15 kg vegetable peelers (not for models with abrasive cylinder) PNC 653204 ❑
- Abrasive plate for large onions T10 and T15 (not for models with abrasive cylinder) PNC 653205 ❑
- Drying basket for T15 PNC 653209 ❑
- Stainless steel seashell plate for 10/15 kg vegetable peelers (not for models with abrasive cylinder) PNC 653620 ❑

Peelers
T15E - 15 kg - Abrasive plate + Filter table

Front

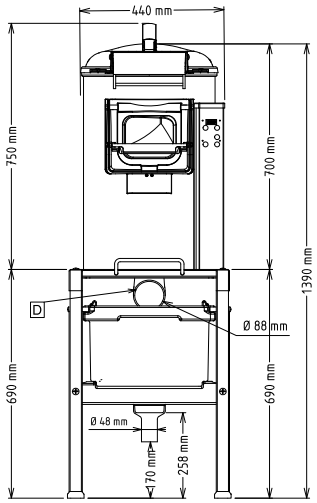

Side

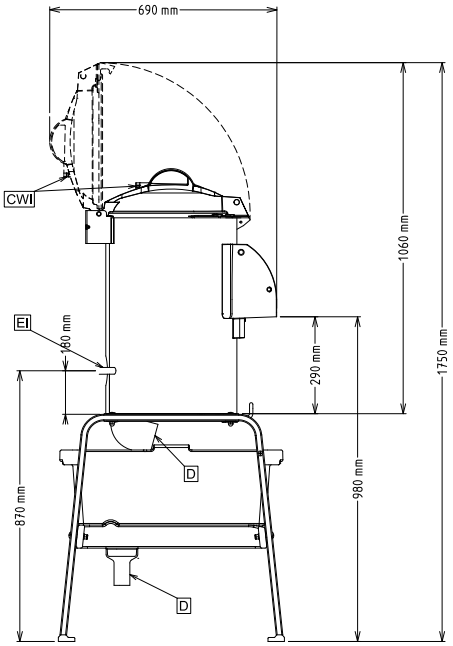

CWI1 = Cold Water inlet 1 (cleaning)
D = Drain
EI = Electrical inlet (power)

Top

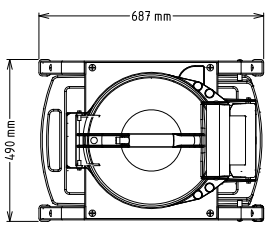

Electric	
Supply voltage:	200-240/380-440 V/3 ph/50/60 Hz
Total Watts:	0.37 kW
Capacity:	
Performance (up to):	240 kg/Cycle
Capacity:	15 litres
Key Information:	
External dimensions, Width:	490 mm
External dimensions, Depth:	687 mm
External dimensions, Height:	1440 mm
Net weight (kg):	59
Peeling capacity/potatoes:	240 kg/h

Components

- 1 of **603512** (DT15E324) 15 kg vegetable peeler. Abrasive plate
  - **Shipping weight:** 47 kg
- 1 of **653783** (FTSHAVP) Filter table with sliding shelf, pre-assembled
  - **Shipping weight:** 18.8 kg

The company reserves the right to make modifications to the products without prior notice. All information correct at time of printing.

2026.11.19