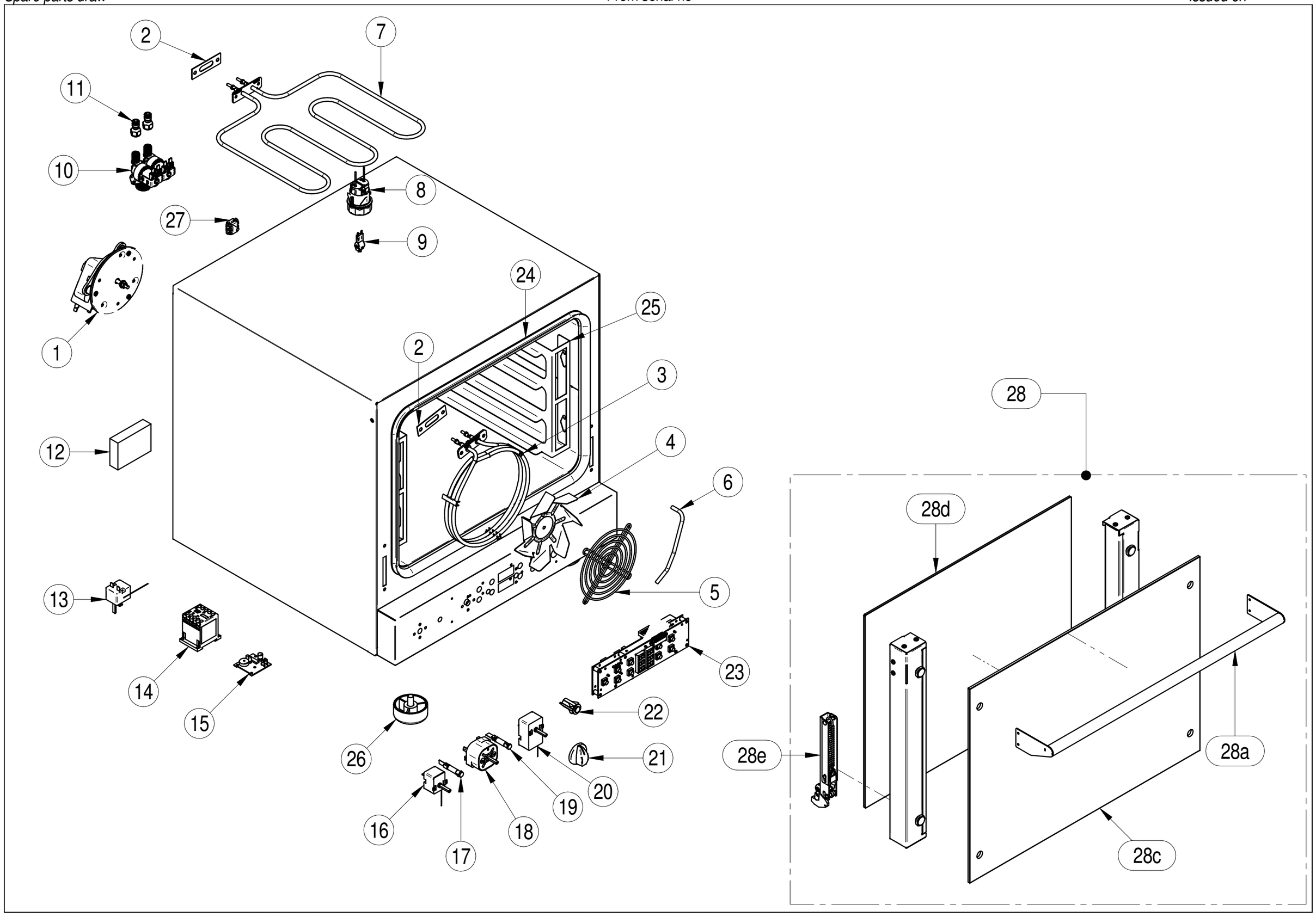

QUESTO DISEGNO E' DI NOSTRA PROPRIETA' E NON PUO' ESSERE USATO O RIPRODOTTO SENZA LA NOSTRA AUTORIZZAZIONE / THIS DRAWING BELONG SOLELY TO OUR COMPANY AND CANNOT BE USED OR RIPRODUCED WITHOUT OUR LICENCE.

Data:	Cod. esploso	Fast Value Tilt-up door				FROM DATE	TO DATE	FV-CME304-LR	FV-CME404-LR	FV-CME304-HR	FV-CME404-HR	FV-CME304-HRG	FV-CME404-HRG	FV-UME304-HR	FV-UME404-HR	FV-UME304-HRG	FV-UME404-HRG	FV-UPE304-HRG	FV-UPE404-HRG
16/12/2019	B04.0012.21.LX																		
Pos.	**Codice**	**Descrizione**	**Description EN**	**Description FR**	**Description DE**			**Q.tà**											
1	DS0020-00	Motore	Motor	Moteur	Motor			2	2	2	2	2	2	2	2	2	2	2	2
2	PTPS-006	Guarnizione resistenza	Heating Element Gasket	Joint Résistance	Heizungdichtung			2	2	2	2	3	3	2	2	3	3	3	3
3	LC-020	Resistenza	Heating Element	Résistance	Heizungelement			2	2	-	-	2	2	-	-	2	2	2	2
	LC-024	Resistenza	Heating Element	Résistance	Heizungelement			-	-	2	2	-	-	2	2	-	-	-	-
4	DS0010-00	Ventola	Fan	Ventilateur	Lüfter			2	2	2	2	2	2	2	2	2	2	2	2
5	NGO0040-00	Griglia ventilazione	Ventilation Grid	Grille De Ventilation	Lüftunsgitter			2	2	2	2	2	2	2	2	2	2	2	2
6	HC-113	Tubo acqua camera	Cooking Chamber Water Injection Pipe	Tube Injection Chambre De Cuisson	Wassereinspritzrohr			-	-	-	-	-	-	2	2	2	2	2	2
7	LC-022	Resistenza salamandra	Salamander Heating Element	Salamandre Résistance	salamander heizungelement			-	-	-	-	1	1	-	-	1	1	1	1
8	LC-053	Portalampada	Bulb Socket	Support De Lampe	Lampenfassung			1	1	1	1	1	1	1	1	1	1	1	1
9	LC-051	Lampada	Lamp	Lampe	Birne			1	1	1	1	1	1	1	1	1	1	1	1
10	LC-540	Elettrovalvola	Solenoid Valve	Eléctrovanne	Elektroventil			-	-	-	-	-	-	1	1	1	1	1	1
11	HR-660	Raccordo tubo x elettrov.	Solenoid Valve Fitting	Raccord Tuyau Électrovanne	Rohrverschrabung Elektroventil			-	-	-	-	-	-	2	2	2	2	2	2
12	FX0141-00	Morsettiera	Terminal Board	Terminal	Klemmleiste			1	1	1	1	1	1	1	1	1	1	1	1
13	LC-376	Term Sicurezza	Safety Thermostat	Thermostat De Sécurité	Sicherheit Thermostat			1	1	1	1	1	1	1	1	1	1	1	1
14	LC-310	Contattore	Contactor	Contacteur	Kontaktor			2	2	2	2	2	2	2	2	2	2	2	2
15	C5366-00	Buzzer	Buzzer	Sonnerie	Summer			1	1	1	1	1	1	1	1	1	1	-	-
16	LC-375	Termostato	Thermostat	Thermostat	Thermostat			1	1	1	1	1	1	1	1	1	1	-	-
17	C5411-00	Lampada spia arancio	Orange Pilot Lamp	Voyant Orange	Orange Kontrollampe			1	1	1	1	2	2	1	1	2	2	-	-
18	LC-366	Timer	Timer	Minuterie	Timer			1	1	1	1	1	1	1	1	1	1	-	-
19	C5410-00	Lampada spia verde	Green Pilot Lamp	Voyant Vert	Grün Kontrollampe			1	1	1	1	1	1	1	1	1	1	-	-
20	LC-367	Timer salamandra	Timer Salamandre	Minuterie Salamandre	salamander timer			-	-	-	-	1	1	-	-	1	1	-	-
21	C9793-00	Manopola	Knob	Manette	Knopf			2	2	2	2	3	3	2	2	3	3	-	-
22	C5421-00	Pulsante vapore	Steam Button	Bouton Vapeur	Dampftaste			-	-	-	-	-	-	1	1	1	1	-	-
23	MC-921-22	Tastiera elettronica	Electronic Keyboard	Clavier Eléctronique	Platine			-	-	-	-	-	-	-	-	-	-	1	1
24	NGG0027-00	Guarnizione camera	Cooking Chamber Gasket	Joint Chambre De Cuisson	Türdichtung			1	1	1	1	1	1	1	1	1	1	1	1
25	C88.0017.00	Portateglie dx/sx 460x370	Tray-Slides Right-Left 460x370	Glissières Gauche 460x370	Einschubschienen rechts/links 460x370			-	2	-	2	-	2	-	2	-	2	-	2
	C22.0269.00	Portateglie dx	Tray-Slides Right	Glissières Droit	Einschubschienen rechts			1	-	1	-	1	-	1	-	1	-	1	-
	C22.0270.00	Portateglie sx	Tray-Slides Left	Glissières Gauche	Einschubschienen links			1	-	1	-	1	-	1	-	1	-	1	-
26	HC-902	Piedino	Foot	Pied Du Four	Fuβ			4	4	4	4	4	4	4	4	4	4	4	4
27	LC-413	Equipotenziale	Equipotential	Équipontential	Equipotential			1	1	1	1	1	1	1	1	1	1	1	1
28	C14.0125.00	Porta	Oven Door	Porte Du Four	Tür			1	1	1	1	1	1	1	1	1	1	1	1
28a	C12.0086.00	Maniglia porta	Door Handle	Poignée De Porte	Türgriff			1	1	1	1	1	1	1	1	1	1	1	1
28c	C56.0047.00	Vetro esterno	External Glass	Verre Extérieure	Aussenglass			1	1	1	1	1	1	1	1	1	1	1	1
28d	C56.0046.00	Vetro interno	Internal Glass	Verre Intérieure	Innenglass			1	1	1	1	1	1	1	1	1	1	1	1
28e	C48.0003.00	Cerniera	Hinge	Charnière	Scharnier			2	2	2	2	2	2	2	2	2	2	2	2